SPECIFICATION

PRODUCT NO. : **TCXD070IBLGA-475**
VERSION : **Ver 1.1**
ISSUED DATE : **2025-06-27**

This module uses ROHS material

FOR CUSTOMER： _____

☐：APPROVAL FOR SPECIFICATION
■：APPROVAL FOR SAMPLE

DATE	APPROVED BY

Xinli Optoelectronics ：

Presented by	Reviewed by	Organized by

Note:

1.Xinli Optronics reserves the right to make changes without further notice to any products herein to improve reliability, function or design.

2.All rights are reserved. No one is permitted to reproduce or duplicate the whole or part of this document without Xinli Optronics' permission.

XINLI Optronics Co.,Ltd

1. Record of Revision

Revision	Description	Date
1.0	Initial Release	2025/06/24
1.1	1.CG 表面做 AG+AF 处理；2.VA 四个角导 R3.0 圆角	2025/06/27

XINLI Optronics Co.,Ltd

2. General Description and Features

The 7.0 inch Module named TCXD070IBLGA-475 is a-Si TFT-LCD module, which is the type of transmissive. It is consisted of TFT-LCD Panel, one Driver IC, FPC, one Back-Light . Features of this product are listed in the following table.

NO	Item	Contents	Unit
(1)	Module Outline	179.8(H)*107.67(V)*7.6(T)	mm
(2)	LCD Active area	153.6(H)*90.00(V)	mm
(3)	Dot Number	1024 RGB*600	/
(4)	Dot size	0.150*0.150	mm
(5)	LCD type	TFT Transmissive	/
(6)	Display Color	16.7M	/
(7)	Viewing direction	Free	/
(8)	Backlight Type	21Chip-White LEDs	/
(9)	Power Supply	3.3V(TYP)	V
(10)	Drive IC	JD9165BA	/
(11)	Interface	FPC 0. 5mm_Pitch 40pin	/
(12)	Interface type	MIPI interface	/
(13)	Module weight	TBD	g

XINLI Optronics Co.,Ltd

3.Mechanical Dimension

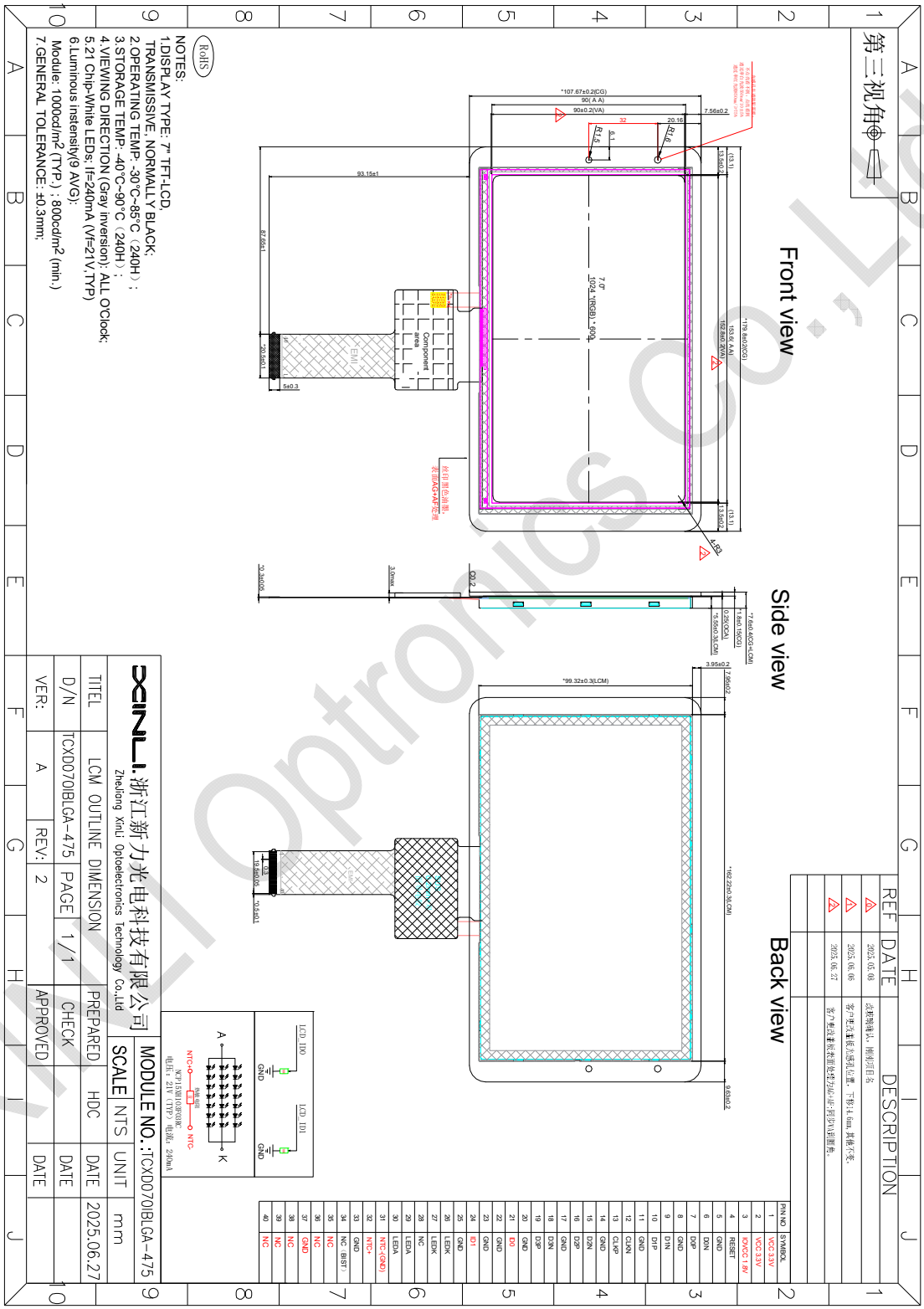

Xinli Optronics Co.,Ltd

4.Interface Pin Connection

Connectors required:FH28D-0.5SH-40S,
LCM interface Pin:

No.	Symbol	I/O	Function
1	VCC	P	Power Supply(3.3V)
2	VCC	P	Power Supply(3.3V)
3	IOVCC	P	I/O voltage(1.8V)
4	RESET	I	Reset pin
5	GND	P	Ground
6	D0N	I/O	Negative MIPI differential data input
7	D0P	I/O	Positive MIPI differential data input
8	GND	P	Ground
9	D1N	I	Negative MIPI differential data input
10	D1P	I	Positive MIPI differential data input
11	GND	P	Ground
12	CLKN	I	Negative MIPI differential clock input
13	CLKP	I	Positive MIPI differential clock input
14	GND	P	Ground
15	D2N	I	Negative MIPI differential clock input
16	D2P	I	Positive MIPI differential clock input
17	GND	P	Ground
18	D3N	I	Negative MIPI differential clock input
19	D3P	I	Positive MIPI differential clock input
20	GND	P	Ground
21	ID0	-	Connect to ground
22	GND	P	Ground
23	GND	P	Ground
24	ID1	-	Connect to ground
25	GND	P	Ground
26	LEDK	P	Backlight-
27	LEDK	P	Backlight-
28	NC	-	No connector

XINLI Optronics Co., Ltd

29	LEDA	P	Backlight+
30	LEDA	P	Backlight+
31	NTC-	-	Connect to ground
32	NTC+	-	NTC+
33	GND	P	Ground
34	NC	-	No connector
35	NC	-	No connector
36	NC	-	No connector
37	GND	P	Ground
38	NC	-	No connector
39	NC	-	No connector
40	NC	-	No connector

5. Maximum Rating

Item	Symbol	Rating	Unit
Operating temperature	Top	-30 to 85	℃
Storage temperature	Tst	-40 to 90	℃
Power supply for analog circuit	VCI	2.8~ 3.6	V

6. Electrical Characteristics

Item		Symbol	Condition	Min.	Typ.	Max.	Unit
Power supply		VCI	-	2.8	3.3	3.6	V
I/O voltage.		IOVCC	-	1.71	1.8	1.89	V
Logic input signal Voltage	H level	V_{IH1}	-	0.7*VCI	-	VCI	V
	L level	V_{IL1}		GND	-	0.3*VCI	V

XINLI Optronics Co., Ltd

7. Backlight Characteristics

Item	syb	Min	Typ	Max	Unit	Condition
Voltage（LED A）	Vf	19.6	21	23.1	V	IF=240mA(80mA/LED)
Luminance(module)	Lv	800	1000	-	cd/m^2	
Number of LED	-	21			pcs	-
LED life-span	-	-	-	-	Hrs	-

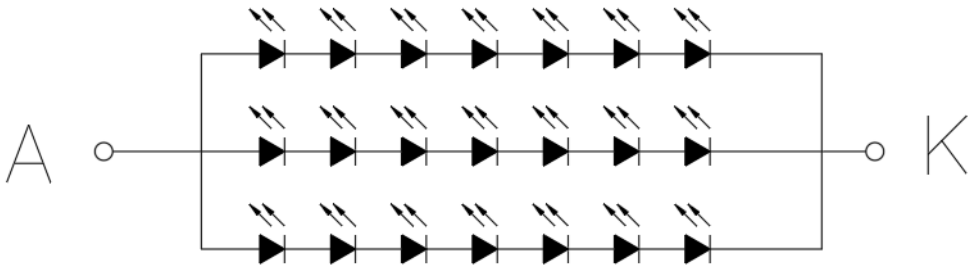

LED 电路图

电压：21V（TYP）电流：240mA

XINLI Optronics Ltd

8. MIPI AC characteristic

8.1 MIPI Low Power Transmitter AC Specification

Parameter		Symbol	Min	Typ	Max	Units	Notes
15%~85% rising time and falling time		T_{RLP} /T_{FLP}	-	-	25	ns	-
30%~85% rising time and falling time		T_{REOT}	-	-	35	ns	-
Pulse width of LP exclusive-OR clock	First LP EXOR clock pulse after STOP state or Last pulse before stop state	$T_{LP\text{-}PULSE\text{-}TX}$	100	-	-	ns	-
	All other pulses		100	-	-	ns	-
Period of the LP EXOR clock(LP Speed)		$T_{LP\text{-}PER\text{-}TX}$	200	-	-	ns	-
Slew Rate @CLOAD =0pF		δ V/δ t_{SR}	20	-	500	mV/ns	-
Slew Rate @CLOAD =5pF			20	-	200	mV/ns	-
Slew Rate @CLOAD =20pF			20	-	150	mV/ns	-
Slew Rate @CLOAD =70pF			20	-	100	mV/ns	-
Load Capacitance		T_{RLP}	-	-	70	pF	-

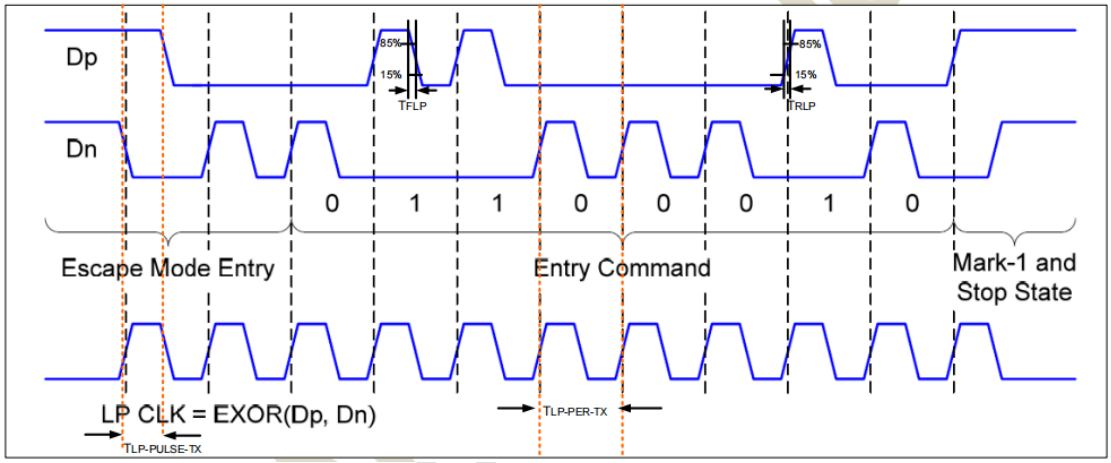

8.2 MIPI Low Power Turnaround Procedure

Turnaround Procedure Operation Timing Parameters

Parameter	Symbol	Min	Typ	Max	Units
Length of any Low-Power state period	T_{LPX}	100	-	-	ns
Time-out before new TX side start driving	$T_{TA\text{-}Sure}$	T_{LPX}	-	2T_{LPX}	ns
Time to drive LP-00 by new TX	$T_{TA\text{-}GET}$	-	5T_{LPX}	-	ns
Time to drive LP-00 after Turnaround Request	$T_{TA\text{-}GO}$	-	4T_{LPX}	-	ns

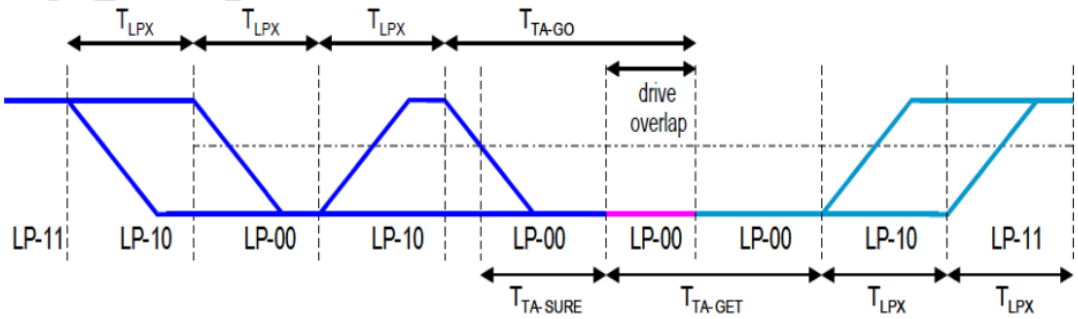

8.3 MIPI High Speed AC characteristics

Parameter	Descript	Spec.			Unit
		Min.	Typ.	Max.	
T_{REOT}	30%-85% rise time and fall time	-	-	35	ns
$T_{CLK-MISS}$	Timeout for receiver to detect absence of Clock transitions and disable the Clock Lane HS-RX.	-	-	60	ns
$T_{CLK-POST}$*1	Time that the transmitter continues to send HS clock after the last associated Data Lane has transitioned to LP Mode. Interval is defined as the period from the end of $T_{HS-TRAIL}$ to the beginning of $T_{CLK-TRAIL}$.	60 ns + 52*UI	-		ns
$T_{CLK-PRE}$	Time that the HS clock shall be driven by the transmitter prior to any associated Data Lane beginning the transition from LP to HS mode.	8	-		UI
$T_{CLK-SETTLE}$	Time interval during which the HS receiver shall ignore any Clock Lane HS transitions, starting from the beginning of $T_{CLK-PRE}$.	95	-	300	ns
$T_{CLK-TERM-EN}$	Time for the Clock Lane receiver to enable the HS line termination, starting from the time point when Dn crosses $V_{IL,MAX}$.	Time for Dn to reach VTERM-EN	-	38	ns
$T_{HS-SETTLE}$	Time interval during which the HS receiver shall ignore any Data Lane HS transitions, starting from the beginning of $T_{HSPREPARE}$.	85 ns + 6*UI	-	145 ns + 10*UI	ns
T_{EOT}	Time from start of $T_{HS-TRAIL}$ or $T_{CLK-TRAIL}$ period to start of LP-11 state	-	-	105ns+n*12*UI	-
$T_{HS-EXIT}$(1)	time to drive LP-11 after HS burst	100	-	-	ns
$T_{HS-PREPARE}$	Time to drive LP-00 to prepare for HS transmission	40ns + 4*UI	-	85ns+6*UI	ns
$T_{HS-PREPARE}$ + $T_{HS-ZERO}$	$T_{HS-PREPARE}$ + Time to drive HS-0 before the Sync sequence	145ns + 10*UI	-	-	ns
$T_{HS-SKIP}$	Time-out at RX to ignore transition period of EoT	40	-	55ns+4*UI	ns
$T_{HS-TRAIL}$	Time to drive flipped differential state after last payload data bit of a HS transmission burst	60 + 4*UI	-	-	ns
T_{LPX}	Length of any Low-Power state period	100	-	-	ns
Ratio T_{LPX}	Ratio of $T_{LPX(MASTER)}/T_{LPS(SLAVE)}$ between Master and Slave side	2/3	-	3/2	-
T_{TA-GET}	Time to drive LP-00 by new TX	$5*T_{LPX}$			ns
T_{TA-GO}	Time to drive LP-00 after Turnaround Request	$4*T_{LPX}$			ns
$T_{TA-SURE}$	Time-out before new TX side starts driving	T_{LPX}	-	$2*T_{LPX}$	ns

Note: (1) For $T_{CLK-POST}$ example:
$T_{CLK-POST}$ min value =164UI when MIPI max frequency per lane = 0.5Gbps.
$T_{CLK-POST}$ min value =112UI when MIPI max frequency per lane = 1Gbps
(2) For T_{EOT}:
When n = 1 for Forward-direction HS mode and n=4 for Reverse-direction HS mode.

XINLI BOARD confidential

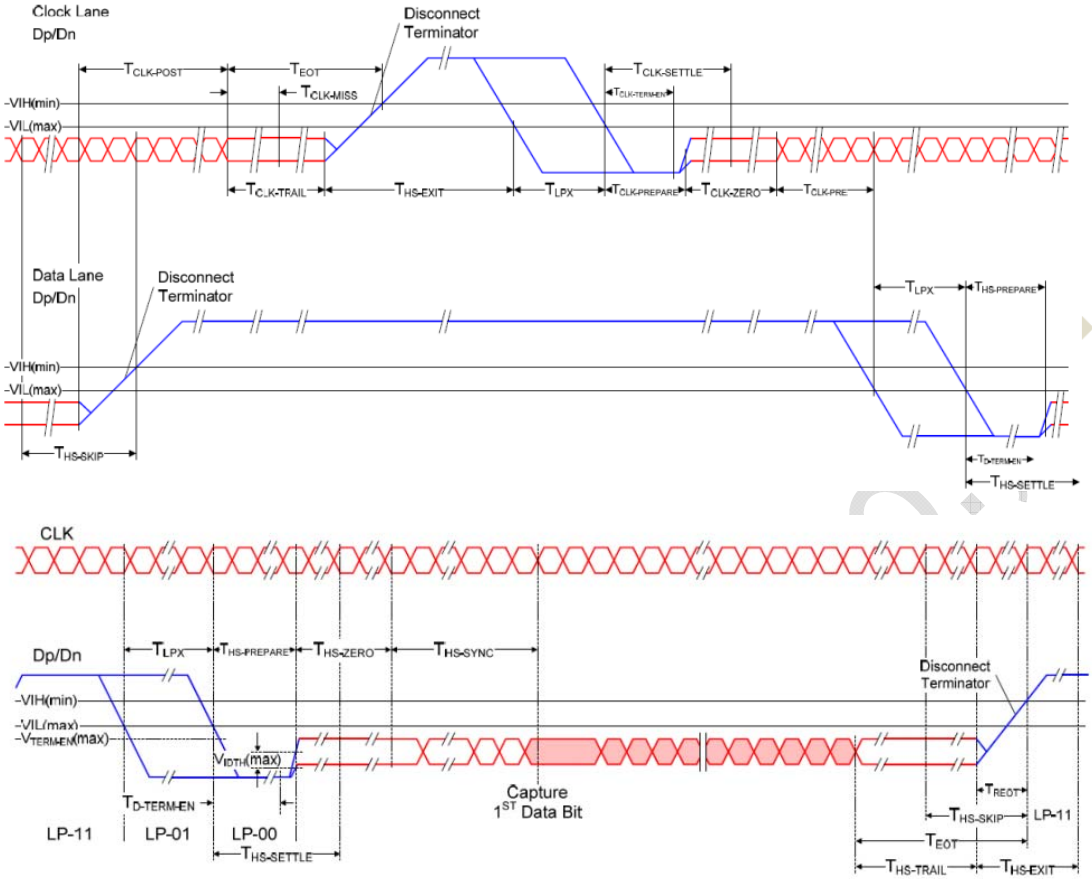

8.4 MIPI data-clock timing specification

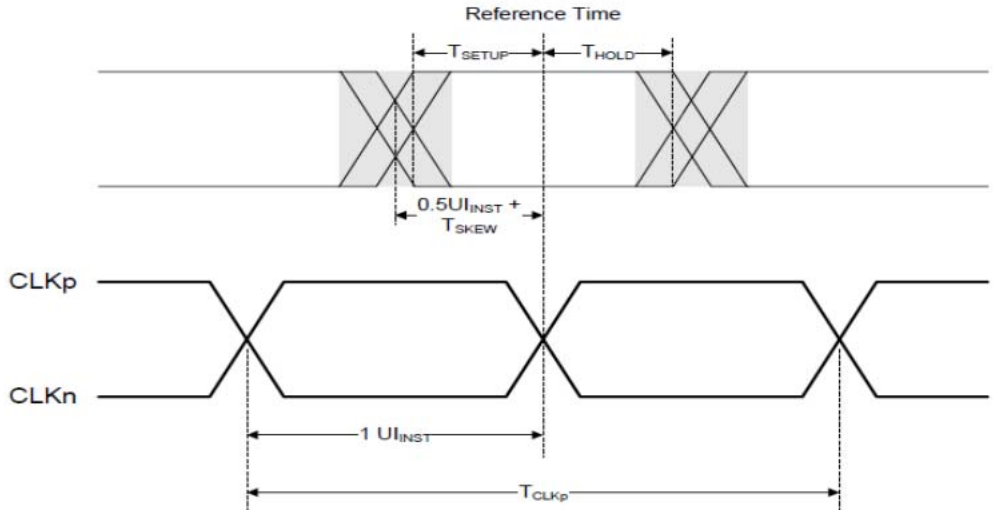

Parameter	Symbol	Min	Typ	Max	Units
Data to clock setup time	$T_{SETUP[RX]}$	0.15(1)	-	-	UI_{INST}
Data to clock hold time	$T_{HOLD[RX]}$	0.15(1)	-	-	UI_{INST}

Note: (1) Total setup and hold window for receiver of 0.3* UI_{INST}.

8.5 MIPI video input timing

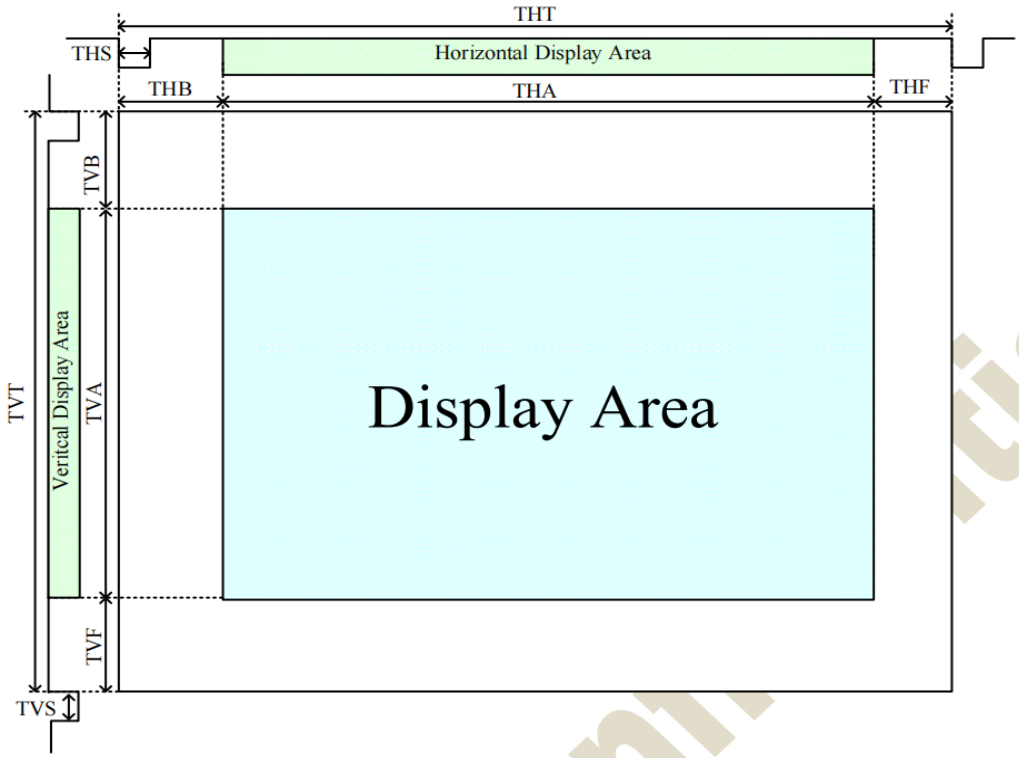

8.5.1 MIPI timing characteristic

Parameter	Symbol	Min	Typ	Max	Unit
MIPI 24-bit RGB@ 2 lane Operating Frequency	-	400	616	750	Mbps
MIPI 24-bit RGB@4 lane Operating Frequency	-	200	308	500	Mbps
Horizontal Total	THT	1114	1344	1400	Byte Clock
Horizontal Valid Data	THA		1024		Byte Clock
Horizontal Sync Width	THS	1	24	HBP-1	Byte Clock
Horizontal Sync Back Porch	THB	60	160	160	Byte Clock
Horizontal Sync Front Porch	THF	30	160	216	Byte Clock
Vertical Total	TVT	620	635	800	Line
Vertical Valid Data	TVA		600		Line
Vertical sync Width	TVS	1	2	VBP-1	Line
Vertical sync Back Porch	TVB	8	23	100	Line
Vertical sync Front Porch	TVF	12	12	100	Line
Vertical Frequency@ 2 lane	-	48	60	-	Hz
Vertical Frequency@ 4 lane	-	48	60	-	Hz

XINLI Optronics Ltd

8.6 Reset Timing

When RESX of the reset pin equals to Low, it will be in the condition of reset. When it is in the condition of reset, it will make the device recover the initial set. However, in order to avoid the reset noise cause reset, there is a mechanism to judge about whether the reset is needed or not.

The closed interval of Low can be shown as the following.

(Test condition: VDD=1.71V to 1.89V / 2.8V to 3.6V , VSS=0V, T_A=-30 ~+85)

Parameter	Symbol	Conditions	Spec.			Unit
			Min.	Typ.	Max	
Reset low pulse width	Trst		6	-	-	µs

8.1 DC Characteristics

Parameter	Symbol	Min.	Typ.	Max.	Unit
MIPI Characteristics for High Speed Receiver					
Single-ended input low voltage	V_{ILHS}	-40	-	-	mV
Single-ended input high voltage	V_{IHHS}	-	-	460	mV
Common-mode voltage	V_{CMRXDC}	70	-	330	mV
Differential input impedance	Z_{ID}	80	100	120	ohm
HS transmit differential voltage(V_{OD}=V_{DP}-V_{DN})	$\|V_{OD}\|$	100	200	250	mV
MIPI Characteristics for Low Power Mode					
Pad signal voltage range	V_I	-50	-	1350	mV
Ground shift	V_{GNDSH}	-50	-	50	mV
Logic 0 input threshold	V_{IL}	0	-	550	mV
Logic 1 input threshold	V_{IH}	1000	-	1350	mV
Input hysteresis	V_{HYST}	25	-	-	mV
Output low level	V_{OL}	-50	-	50	mV
Output high level	V_{OH}	1.1	1.2	1.3	V
Output impedance of Low Power Transmitter	ZOLP	110			ohm
Logic 0 contention threshold	$V_{ILCD,MAX}$	-	-	200	mV
Logic 1 contention threshold	$V_{IHCD,MIN}$	450	-	-	mV
MIPI Digital Operating Current	$I_{VDDMIPI}$	-	15	20	mA
MIPI Digital Stand-by Current	I_{STMIPI}	-	-	250	uA

Note: MIPI Digital Operating and Stand-by Current is at RT 25℃ condition.

Xinli RD Confidential

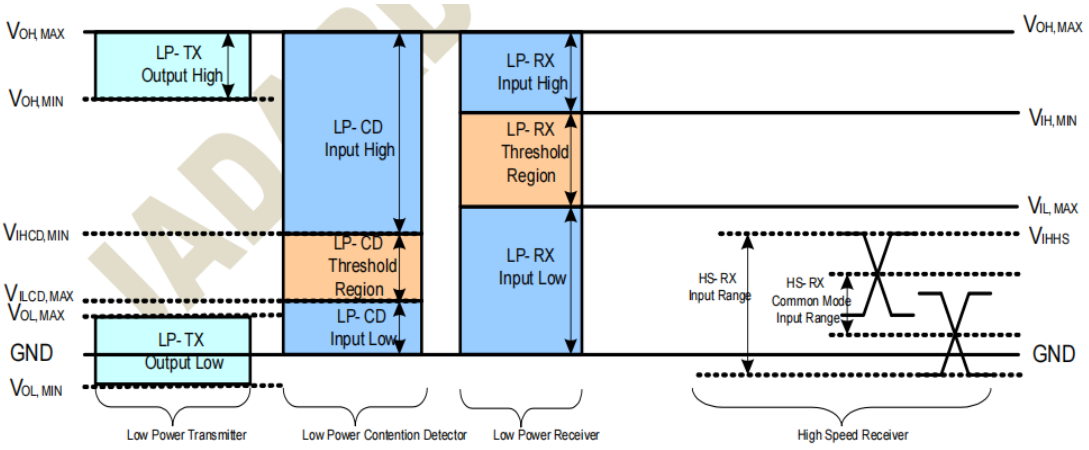

9. Power on/off Timing

The power On/Off timing diagram is illustrated below- MIPI

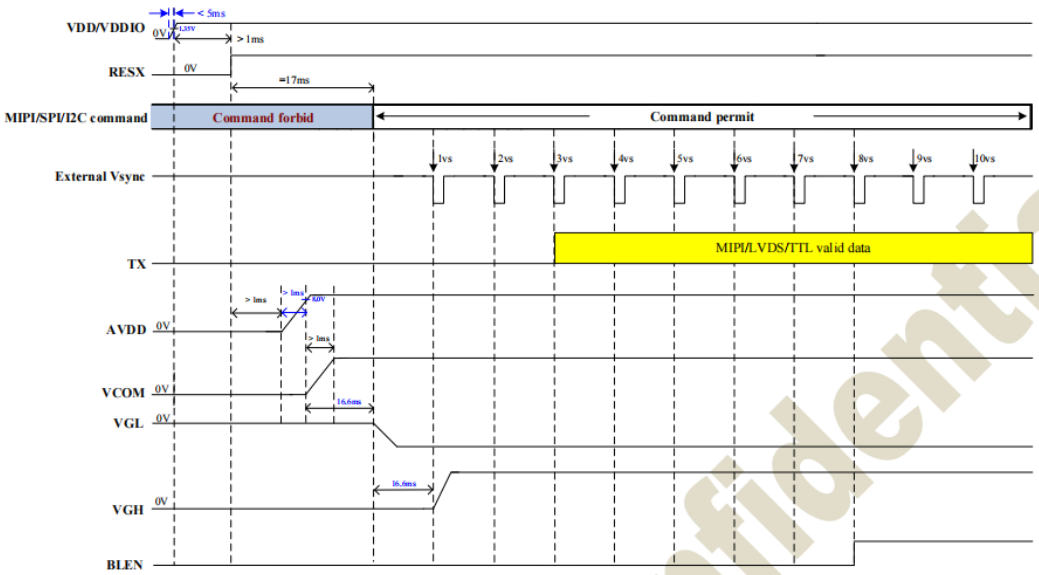

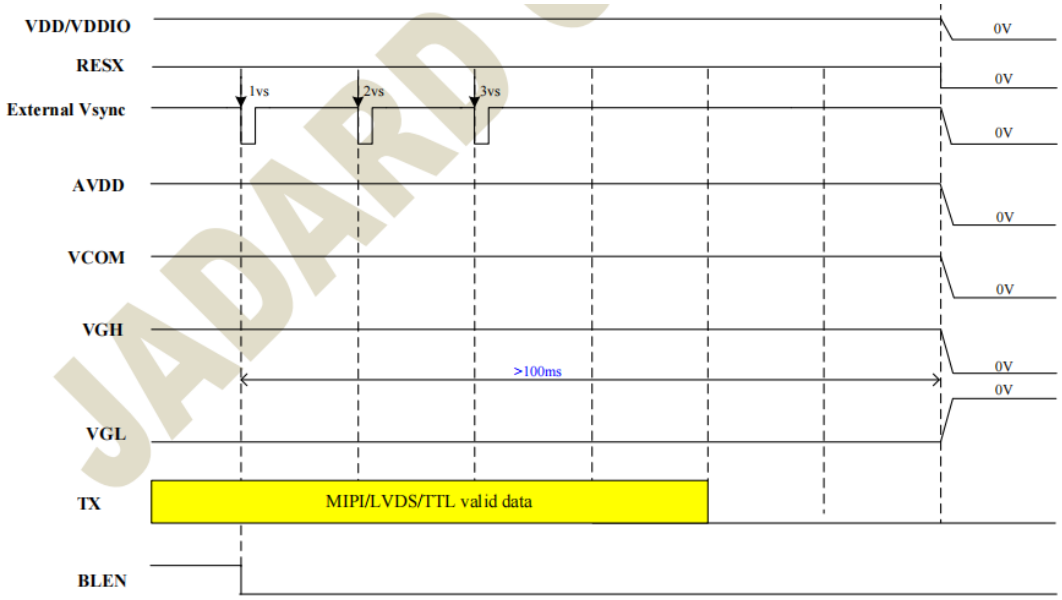

10. Initial Code

Please consult our technical department for detail information.

JADARD
XINLI Optronics Co.,Ltd

11. Electro-Optical Characteristics

Item	Symbol	Condition	Min	Typ	Max	Unit	Note
Response time	Tr+Tf	θ=0° Ta=25℃	-	30	35	ms	4
Uniformity （Five point）	δ WHITE		-	80	-	%	7
Contrast ratio	Cr		1000	1500	-	-	3 ,5
Surface Luminance	Lv		800	1000	-	-	3 ,7
Viewing angle range		θ =0°	75	80	-	deg	6
		θ =90°	75	80	-	deg	
		θ =180°	75	80	-	deg	
		θ =270°	75	80	-	deg	
Color chromaticity (CF only, light source is C light, CIE 1931)	RX	θ = ϕ = 0°	TBD.	TBD.	TBD.		7
	RY		TBD.	TBD.	TBD.		
	GX		TBD.	TBD.	TBD.		
	GY		TBD.	TBD.	TBD.		
	BX		TBD.	TBD.	TBD.		
	BY		TBD.	TBD.	TBD.		
	Wx		TBD.	TBD.	TBD.		
	Wy		TBD.	TBD.	TBD.		

Note 1: Ambient temperature=25℃±2℃

Note 2: To be measured in the dark room with backlight unit.

Note 3: To be measured at the center area of panel with a viewing cone of 1 by Topcon luminance meter BM-7A, after 10 minutes operation (module).

XINLI Optronics Co.,Ltd

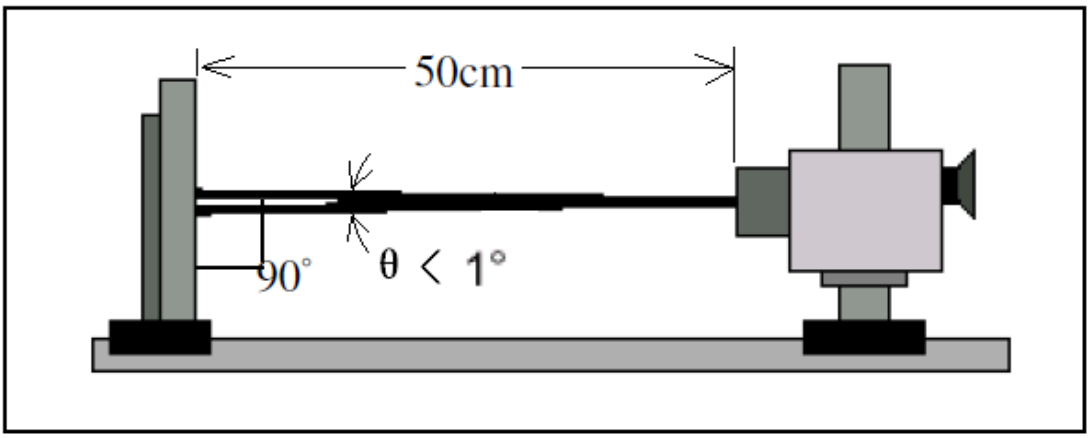

Note 4: Definition of response time:

The output signals of photo detector are measured when the input signals are changed from "black" to "white" (rising time) and from "white" to "black" (falling time), respectively. The response time is defined as the time interval between the 10% and 90% of amplitudes.

Refer to figure as below.

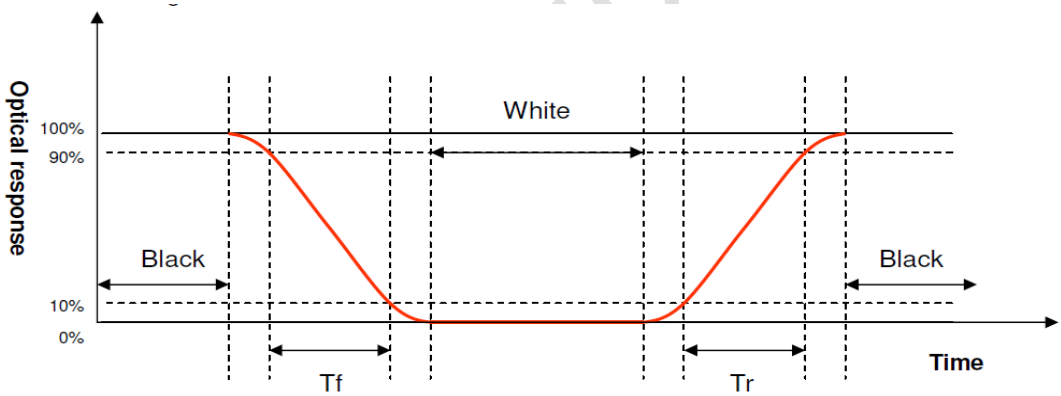

Note 5. Definition of contrast ratio:

Contrast ratio is calculated with the following formula:

$$\text{Contrast ratio (CR)} = \frac{\text{Photo detector output when LCD is at "White" state}}{\text{Photo detector output when LCD is at "Black" state}}$$

Note 6. Definition of viewing angle

Viewing angle is the angle at which the contrast ratio is greater than 10 for TFT module. The angles are determined for the horizontal or x axis and the vertical or y axis with respect to the z axis which is normal to the LCD surface.

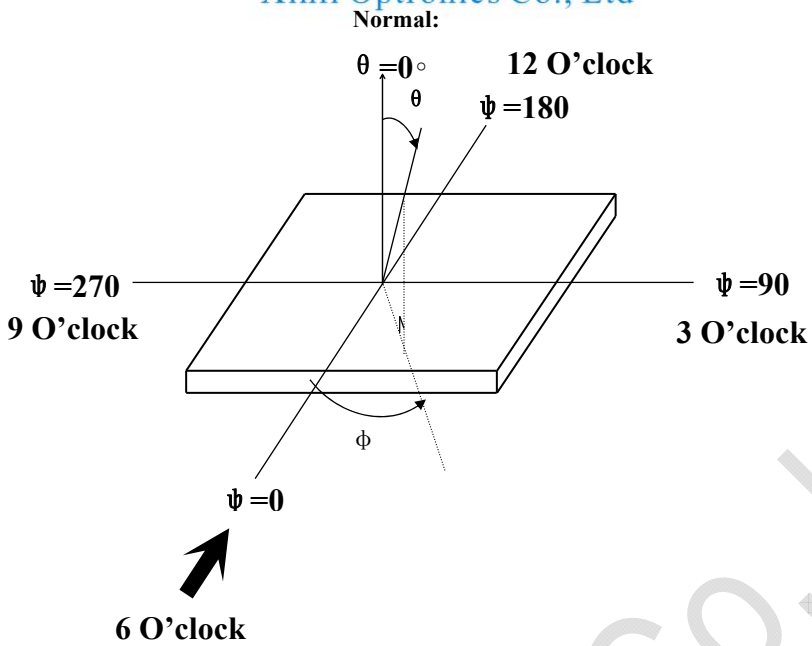

Note 7. Surface luminance is the LCD surface from the surface with all pixels displaying white. Refer to figure as below.

Measuring method for Contrast ratio, surface luminance, Luminance uniformity，CIE (x, y) chromaticity

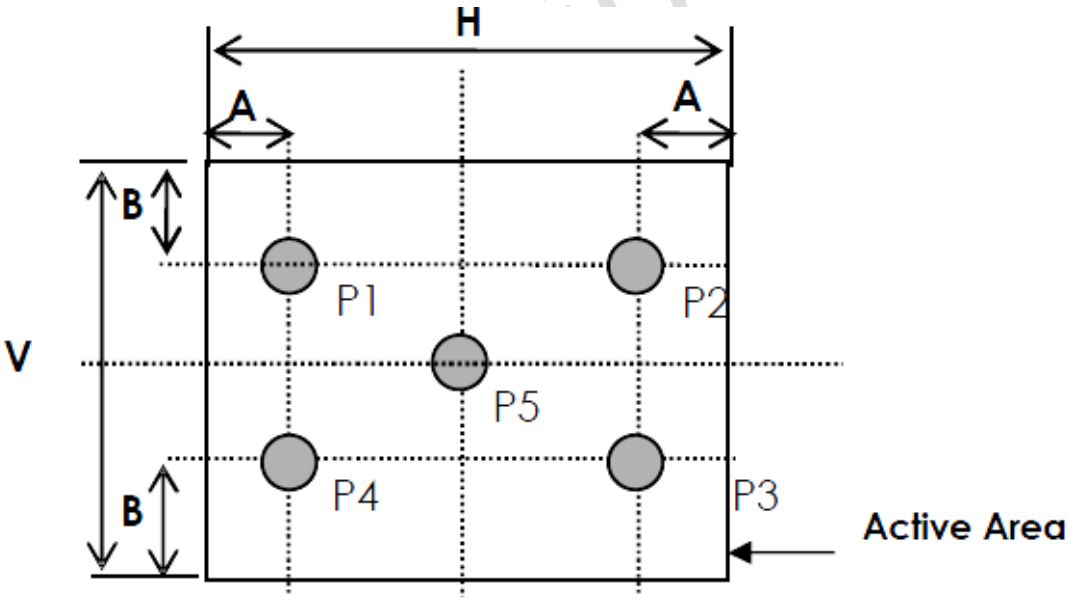

A : 5 mm B : 5 mm H,V : Active Area

Light spot size Æ=7mm, 500mm distance from the LCD surface to detector lens

measurement instrument is TOPCON's luminance meter BM-7A

Uniformity definition= [min of 5point/max of 5points]x100%

Lv = Surface Luminance with all white pixels (P5)

12. Quality Assurance

TBD.

13. Reliability Test

This standard reliability test is done only for the first lot of MP products. Customer and supplier must hold a discussion if other reliability test is requested by customer.

No.	Test Item	Description	Test Condition
1	High temperature storage	Endurance test applying the high storage temperature for a long time	90℃,240 H
2	Low temperature storage	Endurance test applying the low storage temperature for a long time	-40℃,240H
3	High temperature operation	Endurance test applying the electric stress under high temperature for a long time	85℃,240H
4	Low temperature operation	Endurance test applying the electric stress under low temperature for a long time	-30℃,240H
5	High temperature /humidity operation	Endurance test applying the high temperature and high humidity operation for a long time	60℃,90% RH, 240H
6	Temperature Cycle (Non operation)	Endurance test applying the low and high temperature cycle -30℃← →25℃ ← →80℃ 30min←→5min←→30min one cycle	-40℃/80℃, 100 cycles

XINLI Optronics Co.,Ltd

14. Precautions for Operation and Storage

1. Precautions for Operation

(1) Since LCD panel made of glass,in order to prevent from glass broken or color tone change,please do not apply any mechanical shock or impact or excessive force to it when installing the LCD module.

(2) If LCD panel is broken and liquid crystal substance leaks out and contact your skin or clothes,please immediately wash it off by using soap and water.

(3) The polarizer on the LCD surface is soft and easily scratched.Please be careful when handling.

(4) If LCD surface becomes contaminated,please wipe it off gently by using moisten soft cloth with normal hexane,do not use acetone,ketone,ethanol, alcohol or water.If there is saliva or water on the LCD surface,please wipe it off immediately.

(5) When handing LCD module,please be sure that the body and the tools are properly grounded.And do not touch I/F pins with bare hands or contaminate I/F pins.

(6) Do not attempt to disassemble or process the LCD module.

(7) LCD module should be used under recommended operating conditions shown in chapter 6 and 7.

(8) Response time will be extremely slower at lower temperature than at specified temperature and LCD will show different color when at higher temperature.The phenomenon will disappear when returning to specified condition.

(9) Foggy dew,moisture condensation or water droplets deposited on surface and contact terminals will cause polarizer stain or damage, the deteriorated display quality and electrochemical reaction then leads to the shorter life time and permanent damage to the module probably.Please pay attention to the environmental temperature and humidity.

2.Precautions for Storage

(1) Please store LCD module in a dark place,avoid exposure to sunlight,the light of fluorescent lamp or any ultraviolet ray.

(2) Keep the environment temperature at between 10℃and 35 ℃and at normal humidity.Avoid high temperature,high humidity or temperature below 0℃.

(3) That keeps the LCD modules stored in the container shipped from supplier before using them is recommended.

(4) Do not leave any article on the LCD module surface for an extended period of time.

XINLI Optronics Co.,Ltd

3.Warranty period

Warrants for a period of 12 Months from the shipping date when stored or used under normal condition.

15.Package Specification

TBD.

XINLI Optronics Co.,Ltd